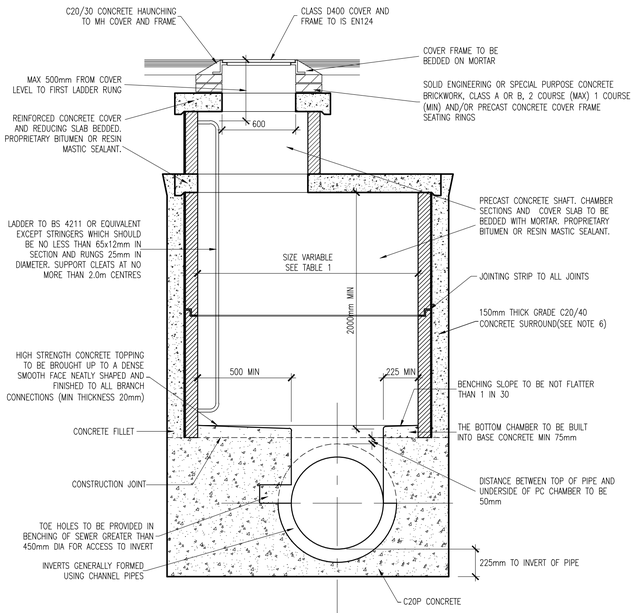

TYPICAL MANHOLE DETAIL – TYPE K
DEPTH TO SOFFIT 3 TO 6m
SCALE 1:25

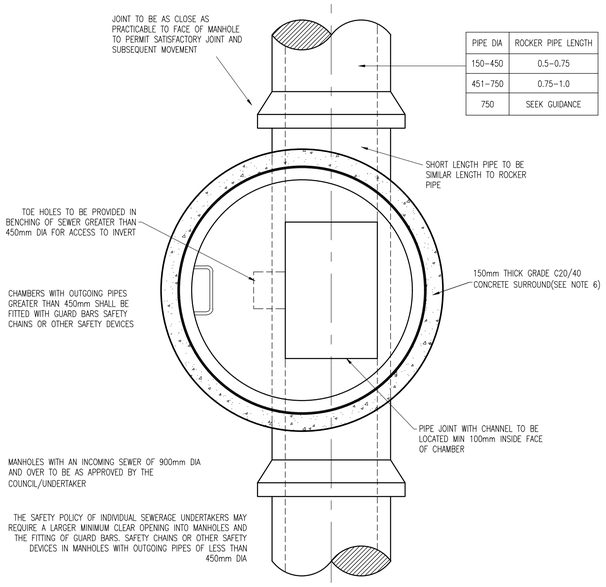

PIPE DIA	ROCKER PIPE LENGTH
150–450	0.5–0.75
451–750	0.75–1.0
750	SEEK GUIDANCE

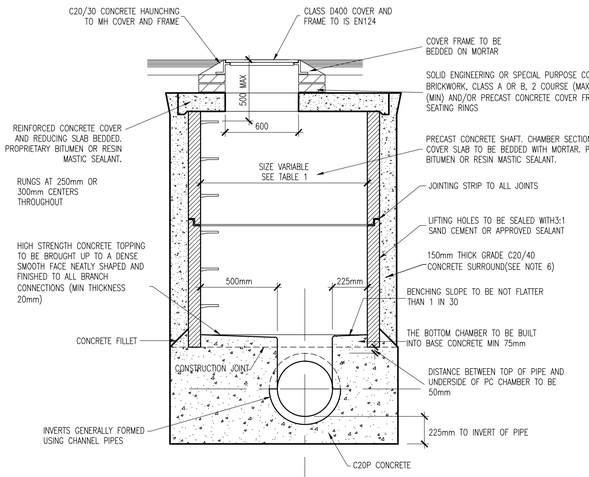

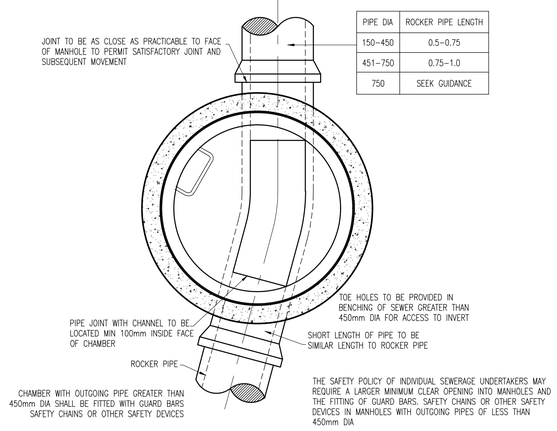

PIPE DIA	ROCKER PIPE LENGTH
150–450	0.5–0.75
451–750	0.75–1.0
750	SEEK GUIDANCE

TYPICAL MANHOLE DETAIL – TYPE J
DEPTH TO SOFFIT 1.35 TO 3m
SCALE 1:25

DIAMETER OF LARGEST PIPE IN MANHOLE (mm)	CHAMBER SECTION DIAMETER (mm)
LESS THAN 375	1200
375 – 450	1350
500 – 700	1500
750 – 900	1800
> 750	PIPE SIZE + 1.3m

TABLE 1

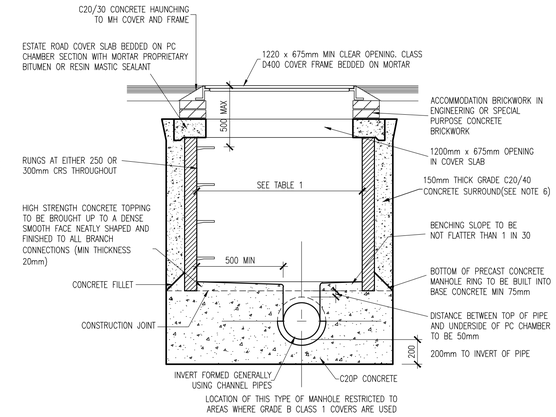

TYPICAL MANHOLE DETAIL – TYPE E
DEPTH TO SOFFIT 1.0 TO 1.35m
SCALE 1:25

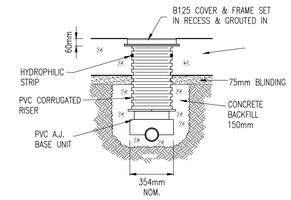

A.J. DETAIL

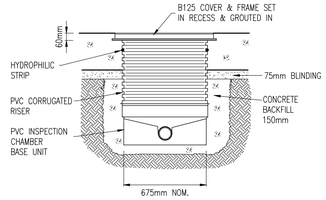

INSPECTION CHAMBER

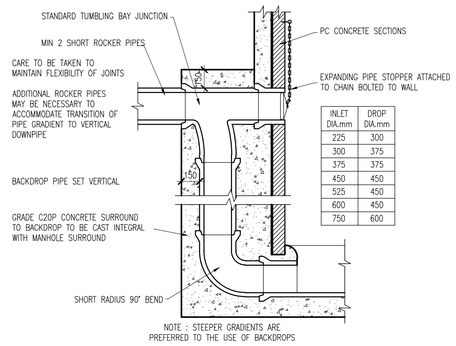

INLET DIA.mm	DROP DIA.mm
225	300
300	375
375	375
450	450
525	450
600	450
750	600

TYPICAL VERTICAL BACKDROP DETAIL
SCALE 1:25

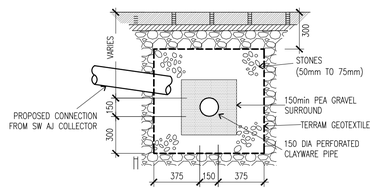

TYPICAL FILTER DRAIN

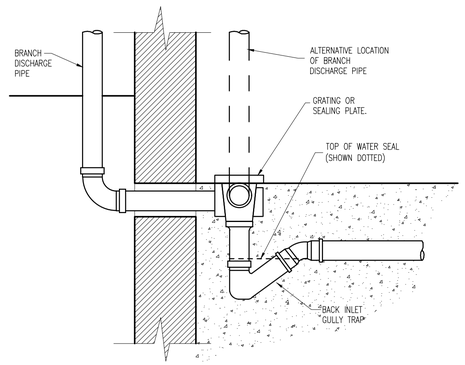

BACK INLET GULLY TRAP

ON ORIGINAL

0 5 10 15 20 25 30 40 50mm

© COPYRIGHT OF THIS DRAWING IS RESERVED BY DBFL CONSULTING ENGINEERS. NO PART SHALL BE REPRODUCED OR TRANSMITTED WITHOUT THEIR WRITTEN PERMISSION.

NO CHANGES OF WHATSOEVER NATURE ARE TO BE MADE TO ANY DETAILS SET OUT OR CONTAINED IN ANY DBFL SPECIFICATIONS OR DRAWINGS UNLESS THE EXPRESS CONSENT HAS BEEN OBTAINED IN ADVANCE, IN WRITING, FROM DBFL.

NOTES:

1. ALL REINFORCED CONCRETE ON THIS DRAWING SHALL BE U.N.O.: 35N20 COVER = 50mm MIN.
2. SURFACE FINISHES FOR CONCRETE:
   - CLASS F1 FOR ALL CONCRETE 100mm OR MORE BELOW GROUND LEVEL.
   - CLASS F3 FOR ALL EXPOSED CONCRETE ABOVE 100mm BELOW GROUND LEVEL.
3. ALL EXPOSED CORNERS ON CONCRETE SHALL BE CHAMFERED WITH 25mm x 25mm CHAMFERS.
4. ALL STRUCTURAL CONCRETE (HEADWALLS, RC MANHOLES, PETROL INTERCEPTOR SLABS) TO RECEIVE MC DUR 1680 (OR SIMILAR APPROVED TAR MODIFIED EPOXY RESIN) TO ALL BURIED SURFACES, TO FINISH 100mm BELOW GROUND LEVEL.
5. ALL SEWERS SHALL BE PRESSURE TESTED PRIOR TO BACKFILLING.
6. TYPE 1 GRANULAR MATERIAL : BROKEN STONE OR GRAVEL TO PASS 10mm SIEVE AND BE RETAINED ON 5mm SIEVE.
7. TYPE 2 GRANULAR MATERIAL :BROKEN STONEOR GRAVEL TO PASS 10mm – 25mm SIEVE, ACCORDING TO PIPE SIZE, (SEE TABLE) AND BE RETAINED ON 5mm SIEVE.
8. TYPE 3 SELECTED FILL : UNIFORM READILY COMPACTED MATERIAL FREE FROM TREE ROOTS, VEGETABLE MATTER, BUILDING DEBRIS, AND FROZEN SOIL AND EXCLUDING CLAY LUMPS RETAINED ON A 75mm SIEVE AND STONES RETAINED ON A 37.5mm SIEVE.
9. RIGID PIPES SHALL MEAN CAST OR SPUN IRON, CONCRETE, ASBESTOS CEMENT OR CLAY.

TYPE 2 GRANULAR MATERIAL :

PIPE SIZE	100% PASSING
UP TO 225mm	10mm SIEVE
225 TO 450mm	20mm SIEVE
ABOVE 450mm	25mm SIEVE

rev	date	description	by	chkd.
P02	29-04-21	NEW SHD STAGE 3 PLANNING	PGC	DMW
P01	15-12-20	STAGE 3 PHD PLANNING	ICD	DMW

client approval: A - Approved; B - Approved with comments; C - Do not use

suitability: S2 - INFORMATION

issue purpose: PLANNING

DBFL Consulting Engineers
Civil, Structural & Transportation Engineering
www.dbfl.ie

DUBLIN OFFICE: Ormond House, Upper Ormond Quay, Dublin 7, D07 W704
PHONE +353 1 400 4000

CORK OFFICE: 14 South Mall, Cork, T12 CT91
PHONE +353 21 2024538

WATERFORD OFFICE: Suite 8b The Atrium, Martrana Gate, Canada Street, Waterford, X91 W028
PHONE +353 51 309 500

project ref.: COOLDOWN COMMONS PHASE 3

drawing title: TYPICAL DRAINAGE DETAILS SHEET 1

client: CAIRN HOMES

designed by	author	scale	sheet size
DMW	ICD	AS NOTED	A1

drawing no.: 190003-DBFL-CS-SP-DR-C-5001

revision: P02